VICTOR
Wall-mounted Control Station

Wall-mounted auxiliary control station, featuring an innovative design, cutting-edge technology and an ergonomic enclosure that is smooth, practical and wear resistant.
Designed to reduce maintenance down time to a minimum, Victor is also available with magnetic mounting case and it can be configured according to customers' needs.

FEATURES

- Reduced installation and wiring time and costs: the cable inlet and the switches fitted in the base of the control station are separated from the actuators, installed on the cover.
- Rubber pushbuttons with symbol disks to ensure protection against dust and prevent jamming when the control station is used in harsh environments.
- The emergency stop mushroom pushbutton complies with standard ISO 13850.
- Positive opening NC contacts for safety functions.
- Mechanical life of pushbuttons and switches: 10 million operations.
- IP protection degree: Victor 1-2-3-4 actuators is classified IP66, IP67 and IP69K, Victor 6-8 actuators IP65.
- NEMA protection degree: grey and black Victor is classified Type 1, 4 and 4X*; yellow Victor is classified Type 1, 4 and 4X* for indoor use only.
- Extreme temperature resistance: -40°F to +176°F (-40°C to +80°C).
- All materials and components used are wear resistant and guarantee protection of the unit against water and dust.

OPTIONS

- Available in configuration from 1 to 8 actuators.
- Cable clamp can be installed at the top, at the bottom or on the back of the control station.
- Available with magnetic mounting case to make the control station even more versatile.
- 1NO or 1NC switches, LEDs voltage 24/48 Vac/dc or 110/230 Vac and potentiometers.
- Mechanical interlock to prevent simultaneous operation of opposite functions.
- Wide range of actuators in different colours: one or two speed pushbuttons, selector switches and key-selector switches in various operation configurations, pilot lights, impulse or latched mushroom pushbuttons with rotation or key-operated release.
- One speed pushbuttons and selector switches available in illuminated version in a range of colours.
- Latched on-off maintained pushbutton enabling an effective visive perception of the command activation.
- Available with labels (symbols and lettering) to be applied next to the actuators, or with pushbuttons with two-colour moulded permanent symbols.

CERTIFICATIONS

- CE marking, cULus* marking and EAC certification.
- Victor is available, upon request, with the SIL1 certification (Safety Integrity Level 1), according to Standard IEC61508.
- Complies with accident prevention regulation BGV C 1 (only for Germany)
- HALT TEST (Highly Accelerated Life Test) passed, simulating conditions largely exceeding standard operating conditions.

* Not available on all versions.

The data and the products illustrated in this brochure may be modified without notice. Under no circumstances can their description have a contractual value.

CERTIFICATIONS

Conformity to Community Directives	2014/35/UE Low Voltage Directive
	2006/42/CE Machinery Directive
Conformity to CE Standards	EN 60204-1 Safety of machinery - Electrical equipment of machines
	EN 60947-1 Low-voltage switchgear and controlgear
	EN 60947-5-1 Low-voltage switchgear and controlgear - Control circuit devices and switching elements - Electromechanical control circuit devices
	EN 60947-5-5 Low-voltage switchgear and controlgear - Control circuit devices and switching elements - Electrical emergency stop device with mechanical latching function
	EN 60529 Degrees of protection provided by enclosures
	ISO 13850 Safety of machinery - Emergency stop - Principles for design
Conformity to cULus Standards	CSA-C22.2 No 14-13 Industrial Control Equipment
	UL 508 Industrial Control Equipment
SIL1	IEC 61508:2010 Part 2-4-6-7 Functional safety of electrical / electronic / programmable electronic safety-related systems
BGV C 1	Regulations for the prevention of accidents BGV C 1 (only for Germany)
HALT TEST	Highly Accelerated Life Test, simulation of conditions largely exceeding the standard operating conditions (data available on request)
Markings and homologations	CE cULus* EAC

GENERAL TECHNICAL SPECIFICATIONS

Ambient temperature	Storage -40°F/+176°F (-40°C/+80°C)
	Operational -40°F/+176°F (-40°C/+80°C)
IP protection degree	Victor 1-2-3-4 actuators IP 66/IP 67/IP 69K
	Victor 6-8 actuators IP 65
NEMA protection degree	Grey and black Victor Type 1, 4 and 4X*
	Yellow Victor Type 1, 4 and 4X* indoor use only
Insulation category	Class II
Cable entry	Cable clamp M20 x 1.5
Operating positions	Any position
Mechanical life	1 speed pushbutton: $10x10^6$ operations
	2 speed pushbutton: $10x10^6$ operations
	Illuminated pushbutton: $10x10^6$ operations

* Not available on all versions.

Springer Controls Company • 96074 Chester Road, Yulee, FL 32097 • (904) 225-0575 • **www.springercontrols.com**

TECHNICAL SPECIFICATIONS OF THE MICROSWITCHES

Code	PRSL1800PI	PRSL1801PI
Utilisation category	AC 15	
Rated operational current	3 A	
Rated operational voltage	250 Vac	
Rated thermal current	10 A	
Rated insulation voltage	300 Vac	
Electrical Reliability EN 60947-5-4	$\lambda < 2.5x10^{-8}$ at 24 V, 5 mA, $5x10^{6}$ cycles	-
Mechanical life	$10x10^{6}$ operations	
Connections	Screw-type terminal	
Wires	$2x0.5mm^2$ - $2x1.5\ mm^2$ - $1x2.5\ mm^2$ (UL (c)UL: use 60°C or 75°C copper (CU) conductors and stiff or flexible wire 14-22 AWG)	
Tightening torque	0.5 Nm	
Microswitch type	Double break, slow action	
Contacts	1NO	1NC (All NC contacts are of the positive opening operation type ⊖)
Scheme		
Markings and homologations	CE cULus EAC	

TECHNICAL SPECIFICATIONS OF THE LEDS

Code	PRSL1820PI	PRSL1821PI
Rated operational voltage	24-48 Vac/dc	110-240 Vac
Rated current consumption	1.30-2.70 mA	1.15-2.50 mA
Scheme		
Markings and homologations	CE cULus EAC	

TECHNICAL SPECIFICATIONS OF THE POTENTIOMETERS

Code	PRVV9079PE	PRVV9019PE	PRVV9039PE
Ohmic value	1 kΩ	4.7 kΩ	10 kΩ
Life time	$15x10^{3}$ movements (minimum)		
Operational ambient temperature	-25°C/+70°C		
Mechanical angle	300°		
Actual electrical angle	267°		
Ohmic value tolerance	±20%		

OVERALL DIMENSIONS

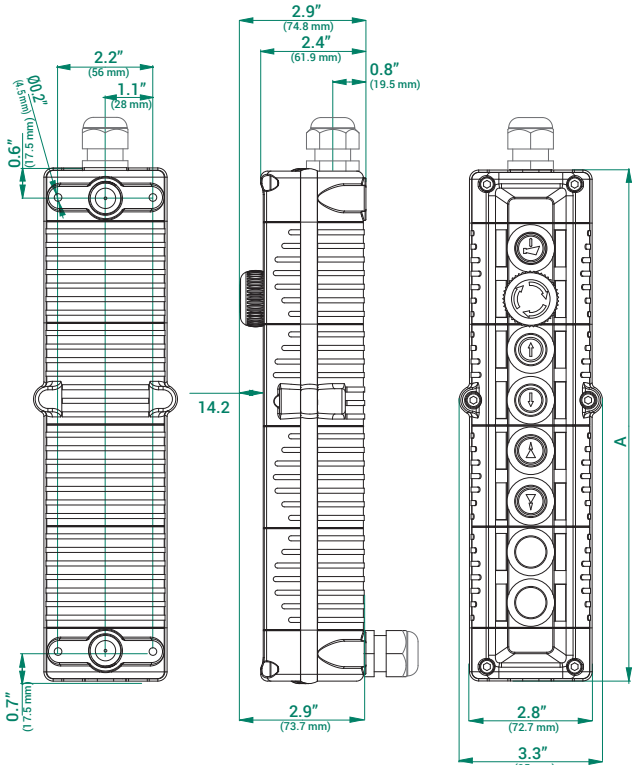

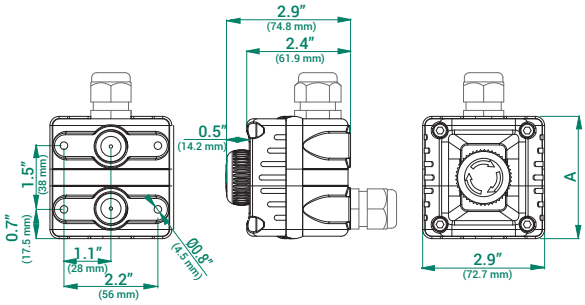

No. of actuators	Dimensions
	A
1	2.9″ (72.9 mm)
2	4.8″ (122 mm)
3	5.9″ (152 mm)
4	7.2″ (182 mm)
6	9.5″ (242 mm)
8	11.9″ (302 mm)

Actuators

Key selector switches

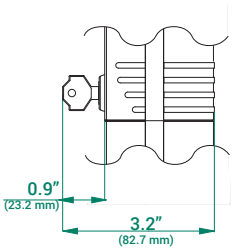

Selector switches

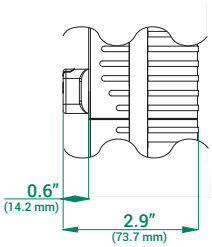

Key mushroom pushbutton

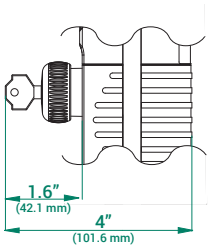

Mushroom pushbutton Ø 40 mm

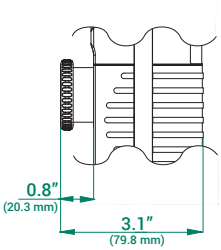

Potentiometer

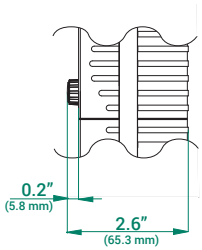

Rectangular Mushroom pushbutton (available only for Victor with 1 actuator)

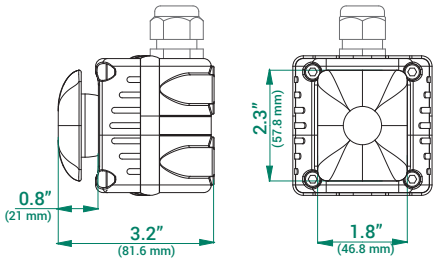

Dimensions of all mushroom pushbuttons refer to the released position.

Springer Controls Company • 96074 Chester Road, Yulee, FL 32097 • (904) 225-0575 • **www.springercontrols.com**

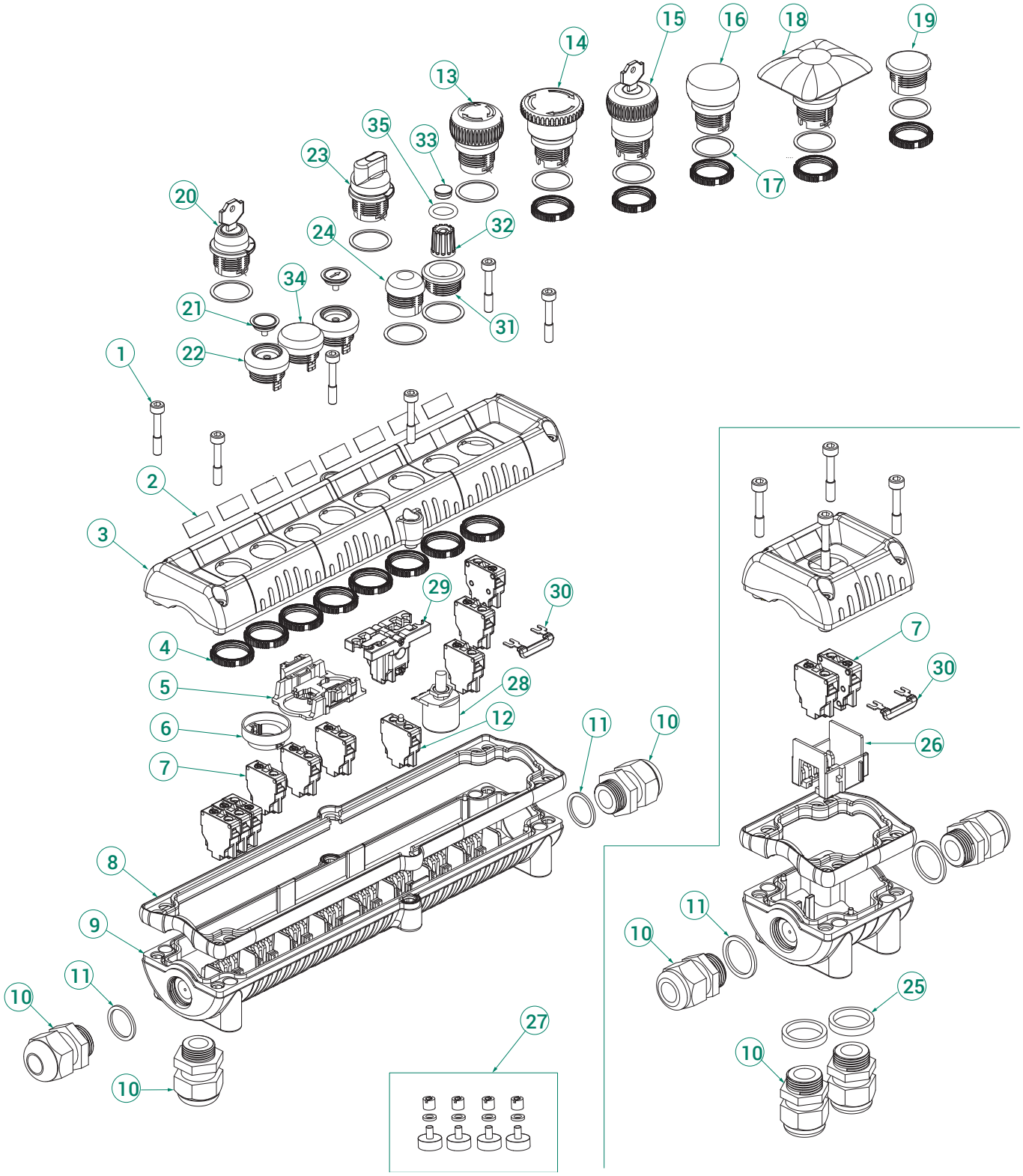
1
2
3
4
5
6
7
8
9
10
11
12
13
14
15
16
17
18
19
20
21
22
23
24
25
26
27
28
29
30
31
32
33
34
35

EMPTY CONTROL STATIONS

	No. of buttons	Cover color			Code
		Grey	Yellow	Black	
	1	X			F71EG00000000001
			X		F71EY00000000001
				X	F71EB00000000001
	2	X			F71FG00000000001
			X		F71FY00000000001
				X	F71FB00000000001
	3	X			F71GG00000000001
			X		F71GY00000000001
				X	F71GB00000000001
	4	X			F71HG00000000001
				X	F71HB00000000001
	6	X			F71IG00000000001
				X	F71IB00000000001
	8	X			F71JG00000000001
				X	F71JB00000000001

Springer Controls Company • 96074 Chester Road, Yulee, FL 32097 • (904) 225-0575 • **www.springercontrols.com**

STANDARD CONTROL STATIONS

Standard control stations are supplied with a cable clamp. Standard control stations are not cULus certified.

1 actuator

	Type of actuator	Cover color			Code
		Grey	Yellow	Black	
	Latched mushroom pushbutton PRSL1801PI switch 1NC 	X			F71EG10000000001
			X		F71EY10000000001
				X	F71EB10000000001
	Key mushroom pushbutton PRSL1801PI switch 1NC 	X			F71EG10000000002
			X		F71EY10000000002
				X	F71EB10000000002
	Impulse mushroom pushbutton PRSL1801PI switch 1NC 	X			F71EG10000000003
			X		F71EY10000000003
				X	F71EB10000000003
	2 positions selector switches PRSL1800PI switch 1NO 	X			F71EG00000001001
			X		F71EY00000001001
				X	F71EB00000001001
	3 positions selector switches N.2 PRSL1800PI switches 1NO+1NO 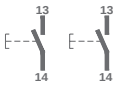	X			F71EG00000001002
			X		F71EY00000001002
				X	F71EB00000001002

2 actuators

	Type of actuator		Cover color			Code
			Grey	Yellow	Black	
	Latched mushroom pushbutton PRSL1801PI switch 1NC 	Start button PRSL1800PI switch 1NO 	X			F71FG11000000001
				X		F71FY11000000001
					X	F71FB11000000001
	Key mushroom pushbutton PRSL1801PI switch 1NC 	Start button PRSL1800PI switch 1NO 	X			F71FG11000000002
				X		F71FY11000000002
					X	F71FB11000000002
	White button PRSL1800PI switch 1NO 	Black button PRSL1800PI switch 1NO 	X			F71FG00020000001
				X		F71FY00020000001
					X	F71FB00020000001

3 actuators

	Type of actuator			Cover color			Code
				Grey	Yellow	Black	
	Latched mushroom pushbutton PRSL1801PI switch 1NC	White button PRSL1800PI switch 1NO	Black button PRSL1800PI switch 1NO	X			F71GG10020000001
					X		F71GY10020000001
						X	F71GB10020000001
	Key mushroom pushbutton PRSL1801PI switch 1NC	White button PRSL1800PI switch 1NO	Black button PRSL1800PI switch 1NO	X			F71GG10020000002
					X		F71GY10020000002
						X	F71GB10020000002
	2 positions selector switches PRSL1800PI switch 1NO	White button PRSL1800PI switch 1NO	Black button PRSL1800PI switch 1NO	X			F71GG00020001001
					X		F71GY00020001001
						X	F71GB00020001001
	3 positions selector switches No.2 PRSL1800PI switches 1NO+1NO 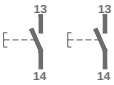	White button PRSL1800PI switch 1NO	Black button PRSL1800PI switch 1NO	X			F71GG00020001002
					X		F71GY00020001002
						X	F71GB00020001002

Springer Controls Company • 96074 Chester Road, Yulee, FL 32097 • (904) 225-0575 • **www.springercontrols.com**

ASSEMBLY DRAWING

2-8 actuators

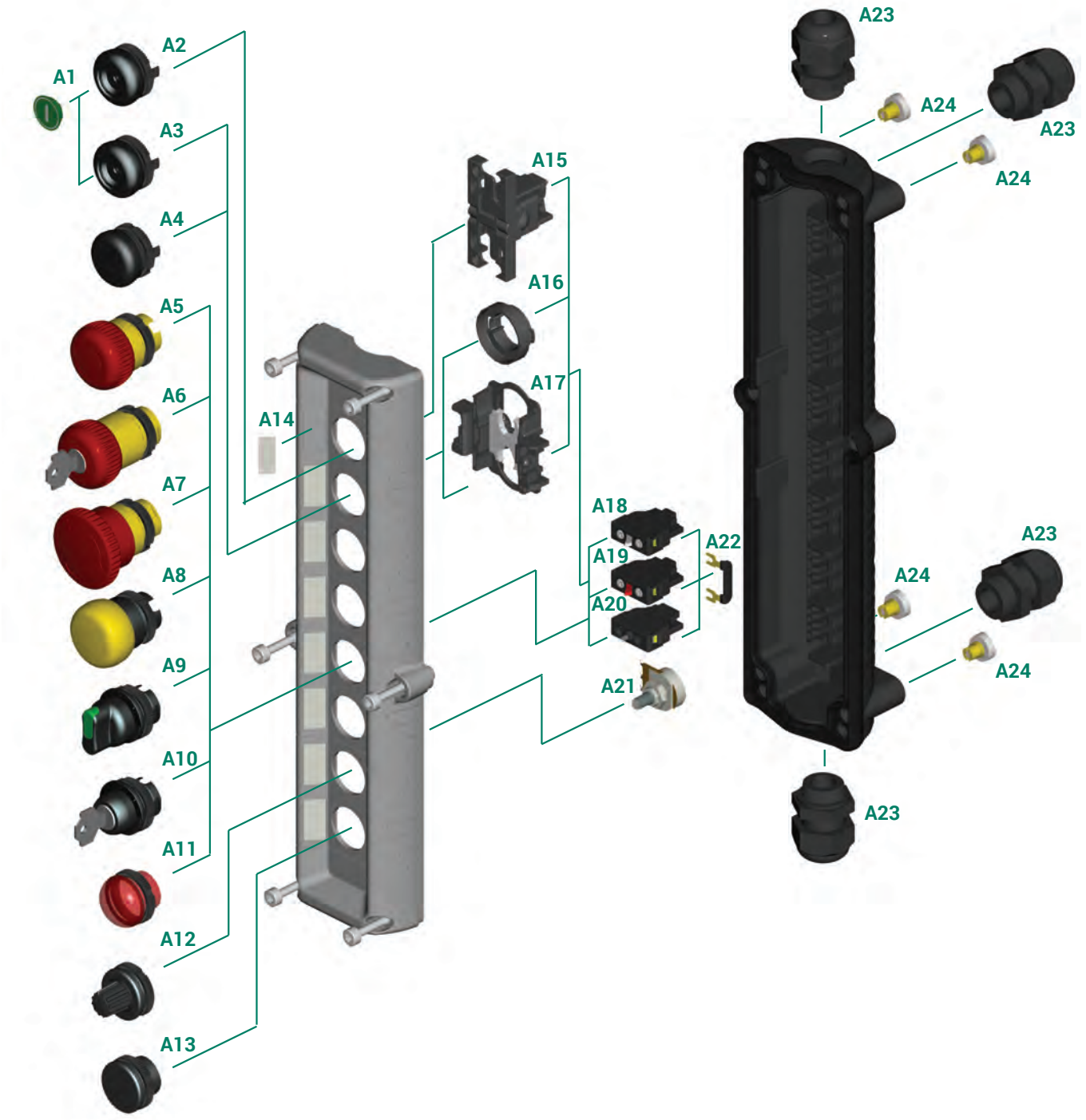

ASSEMBLY DRAWING

1 actuator

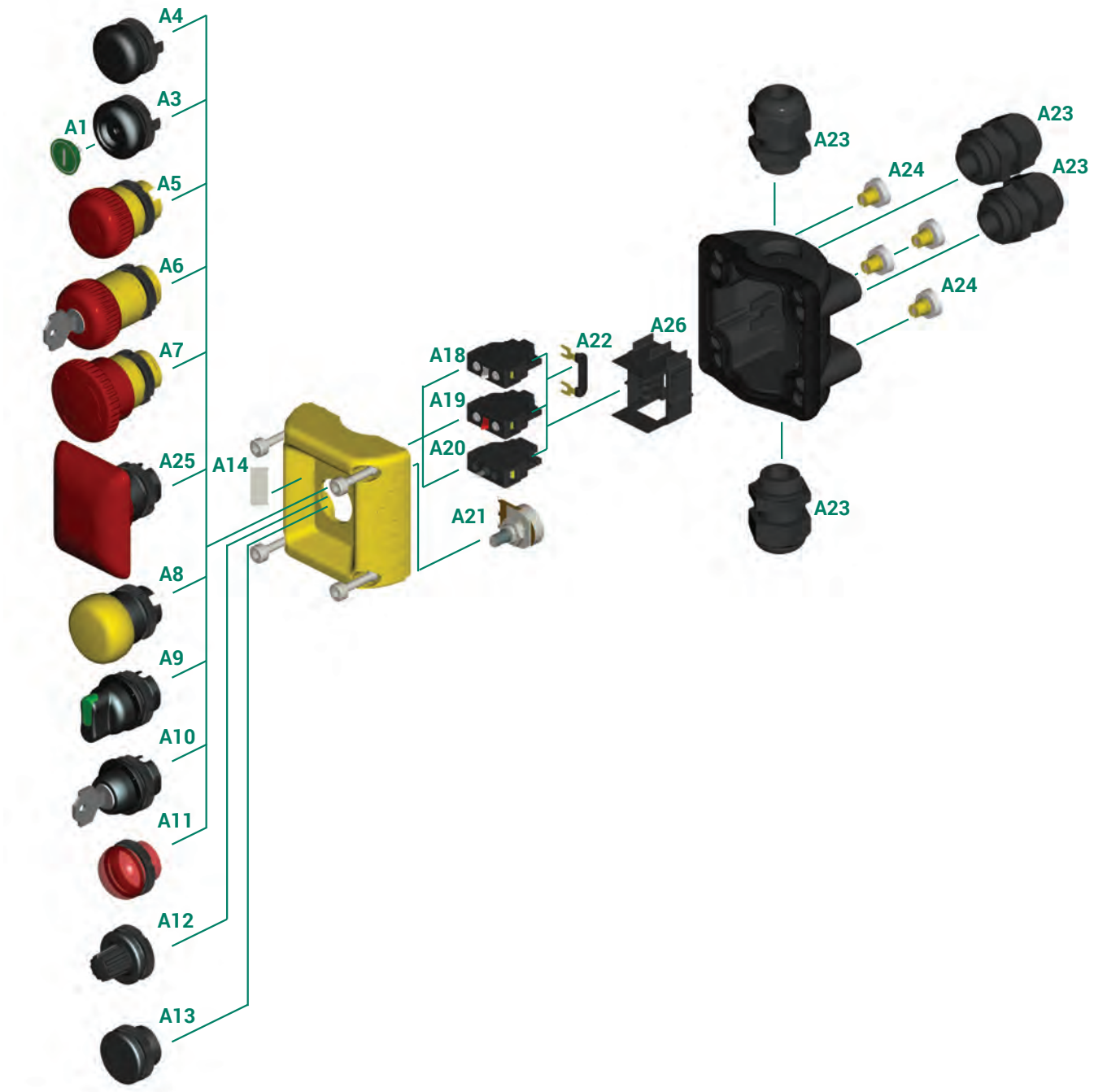

Springer Controls Company • 96074 Chester Road, Yulee, FL 32097 • (904) 225-0575 • **www.springercontrols.com**

COMPONENTS

Switches

Ref.	Drawing	Description	Scheme	Code
A18		1NO switch		PRSL1800PI
A19		1NC switch		PRSL1801PI
A20		LED 24/48 Vac/dc		PRSL1820PI
		LED 110/230 Vac		PRSL1821PI

Potentiometers

Ref.	Drawing	Description	Code
A12+A21		Potentiometer 4.7 kΩ	PRSL1891PI
		Potentiometer 10 kΩ	PRSL1892PI
		Potentiometer 1 kΩ	PRSL1893PI

Actuators

Ref.	Drawing	Description	Code
A1		Disk for pushbutton	PRTA_ _ _ _ _ _ See disk table
A2		Pushbutton for latched ON-OFF maintained actuator	PRSL1803PI
A3		2 speed pushbutton	PRSL1810PI
		1 speed pushbutton	PRSL1811PI
		1 speed illuminated pushbutton	PRSL1815PI
A4		1 speed black pushbutton	PRSL1806PI
		1 speed grey pushbutton	PRSL1807PI
		2 speed black pushbutton	PRSL1808PI
		2 speed grey pushbutton	PRSL1809PI
A13		Blanking plug	PRSL1845PI
A15		Latched ON-OFF maintained actuator	PRSL1804PI

Pilot lights

Ref.	Drawing	Description	Code
A11		White	PRSL1844PI
		Green	PRSL1841PI
		Blue	PRSL1846PI
		Red	PRSL1840PI
		Yellow	PRSL1842PI
		Orange	PRSL1843PI

Mushroom pushbuttons

Ref.	Drawing	Description	Head color	Code
A5		Latched mushroom pushbutton for emergency stop	Red	PRSL1880PI
A6		Key mushroom pushbutton	Red	PRSL1890PI
A7		Latched mushroom pushbutton for emergency stop Ø 40 mm	Red	PRSL1881PI
A8		Impulse mushroom pushbutton Ø 33 mm with black base	Red	PRSL1885ROC
			Blue	PRSL1885BLC
			Yellow	PRSL1885GIC
			Green	PRSL1885VEC
			Orange	PRSL1885ARC
			Black	PRSL1885NEC
A25		Rectangular Mushroom pushbutton (available only for Victor with 1 actuator)	Red	PRSL1882PI
			Black	PRSL1882NEC

Key selector switches

Ref.	Drawing	Positions	Spring return	Maintained positions	Pull-out position	Code
A10		0/1	X		0	PRSL1867PI
				X	0	PRSL1868PI
		1/0/2	X		0	PRSL1869PI
				X	0	PRSL1870PI
		0/1/1+2	X		0	PRSL1871PI
				X	0	PRSL1872PI
		1/2 change-over	X		1	PRSL1873PI
				X	1	PRSL1874PI
		1/1+2/2	X		1+2	PRSL1875PI
				X	1+2	PRSL1876PI

Springer Controls Company • 96074 Chester Road, Yulee, FL 32097 • (904) 225-0575 • **www.springercontrols.com**

Selector switches

Ref.	Drawing	Positions	Color		Code
			Trasparent	Full	
A9		0/1 Spring return	White		PRSL1855BI
			Green		PRSL1855VE
			Blue		PRSL1855BL
			Red		PRSL1855RO
			Yellow		PRSL1855GI
			Orange		PRSL1855AR
		0/1 Maintained	White		PRSL1856BI
			Green		PRSL1856VE
			Blue		PRSL1856BL
			Red		PRSL1856RO
			Yellow		PRSL1856GI
			Orange		PRSL1856AR
		0/1 Spring return		White	PRSL1855BIC
				Green	PRSL1855VEC
				Blue	PRSL1855BLC
				Red	PRSL1855ROC
				Yellow	PRSL1855GIC
				Orange	PRSL1855ARC
		0/1 Maintained		White	PRSL1856BIC
				Green	PRSL1856VEC
				Blue	PRSL1856BLC
				Red	PRSL1856ROC
				Yellow	PRSL1856GIC
				Orange	PRSL1856ARC
A9		1/0/2 Spring return	White		PRSL1857BI
			Green		PRSL1857VE
			Blue		PRSL1857BL
			Red		PRSL1857RO
			Yellow		PRSL1857GI
			Orange		PRSL1857AR
		1/0/2 Maintained	White		PRSL1858BI
			Green		PRSL1858VE
			Blue		PRSL1858BL
			Red		PRSL1858RO
			Yellow		PRSL1858GI
			Orange		PRSL1858AR
		1/0/2 Spring return		White	PRSL1857BIC
				Green	PRSL1857VEC
				Blue	PRSL1857BLC
				Red	PRSL1857ROC
				Yellow	PRSL1857GIC
				Orange	PRSL1857ARC
		1/0/2 Maintained		White	PRSL1858BIC
				Green	PRSL1858VEC
				Blue	PRSL1858BLC
				Red	PRSL1858ROC
				Yellow	PRSL1858GIC
				Orange	PRSL1858ARC

Selector switches

Ref.	Drawing	Positions	Color		Code
			Trasparent	Full	
A9		1/1+2/2 Spring return	White		PRSL1863BI
			Green		PRSL1863VE
			Blue		PRSL1863BL
			Red		PRSL1863RO
			Yellow		PRSL1863GI
			Orange		PRSL1863AR
		1/1+2/2 Maintained	White		PRSL1864BI
			Green		PRSL1864VE
			Blue		PRSL1864BL
			Red		PRSL1864RO
			Yellow		PRSL1864GI
			Orange		PRSL1864AR
		1/1+2/2 Spring return		White	PRSL1863BIC
				Green	PRSL1863VEC
				Blue	PRSL1863BLC
				Red	PRSL1863ROC
				Yellow	PRSL1863GIC
				Orange	PRSL1863ARC
		1/1+2/2 Maintained		White	PRSL1864BIC
				Green	PRSL1864VEC
				Blue	PRSL1864BLC
				Red	PRSL1864ROC
				Yellow	PRSL1864GIC
				Orange	PRSL1864ARC
		0/1/1+2 Spring return	White		PRSL1859BI
			Green		PRSL1859VE
			Blue		PRSL1859BL
			Red		PRSL1859RO
			Yellow		PRSL1859GI
			Orange		PRSL1859AR
		0/1/1+2 Maintained	White		PRSL1860BI
			Green		PRSL1860VE
			Blue		PRSL1860BL
			Red		PRSL1860RO
			Yellow		PRSL1860GI
			Orange		PRSL1860AR
		0/1/1+2 Spring return		White	PRSL1859BIC
				Green	PRSL1859VEC
				Blue	PRSL1859BLC
				Red	PRSL1859ROC
				Yellow	PRSL1859GIC
				Orange	PRSL1859ARC
		0/1/1+2 Maintained		White	PRSL1860BIC
				Green	PRSL1860VEC
				Blue	PRSL1860BLC
				Red	PRSL1860ROC
				Yellow	PRSL1860GIC
				Orange	PRSL1860ARC

Springer Controls Company • 96074 Chester Road, Yulee, FL 32097 • (904) 225-0575 • **www.springercontrols.com**

Selector switches

Ref.	Drawing	Positions	Color		Code
			Trasparent	Full	
A9		1/2 Spring return	White		PRSL1861BI
			Green		PRSL1861VE
			Blue		PRSL1861BL
			Red		PRSL1861RO
			Yellow		PRSL1861GI
			Orange		PRSL1861AR
		1/2 Maintained	White		PRSL1862BI
			Green		PRSL1862VE
			Blue		PRSL1862BL
			Red		PRSL1862RO
			Yellow		PRSL1862GI
			Orange		PRSL1862AR
		1/2 Spring return		White	PRSL1861BIC
				Green	PRSL1861VEC
				Blue	PRSL1861BLC
				Red	PRSL1861ROC
				Yellow	PRSL1861GIC
				Orange	PRSL1861ARC
		1/2 Maintained		White	PRSL1862BIC
				Green	PRSL1862VEC
				Blue	PRSL1862BLC
				Red	PRSL1862ROC
				Yellow	PRSL1862GIC
				Orange	PRSL1862ARC

Accessories

Ref.	Drawing	Description	Code
A14		Label sheet - Symbols	PRET0215PE
		Label sheet - German	PRET0220DE
		Label sheet - English	PRET0220EN
		Label sheet - Spanish	PRET0220ES
		Label sheet - French	PRET0220FR
		Label sheet - Italian	PRET0220IT
A16		Button-switch spacer	PRSL8512PI
A17	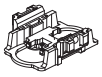	Mechanical interlock	PRSL1850PI
A22		Insulated connecting bridge - positions 3-4 (bag with 5 pieces)	PRSL1911PI
		Insulated connecting bridge - positions 2-4 (bag with 5 pieces)	PRSL1912PI
		Insulated connecting bridge - positions 1-4 (bag with 5 pieces)	PRSL1913PI
		Insulated connecting bridge - positions 1-3 (bag with 5 pieces)	PRSL1914PI
		Insulated connecting bridge - positions 1-2 (bag with 5 pieces)	PRSL1915PI
		Insulated connecting bridge - positions 1-2-3 (bag with 5 pieces)	PRSL1916PI
A23	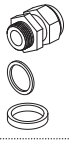	Cable clamp M20x1.5 + washers	PRSL1837PI

Accessories

Ref.	Drawing	Description	Code
A24	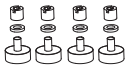	Magnetic mounting kit	PRSL1851PI
A26		1-2-3 switch holder	PRSL8750PI

Full color disks

Transparent disks

Springer Controls Company • 96074 Chester Road, Yulee, FL 32097 • (904) 225-0575 • **www.springercontrols.com**

Label sheet - Symbols

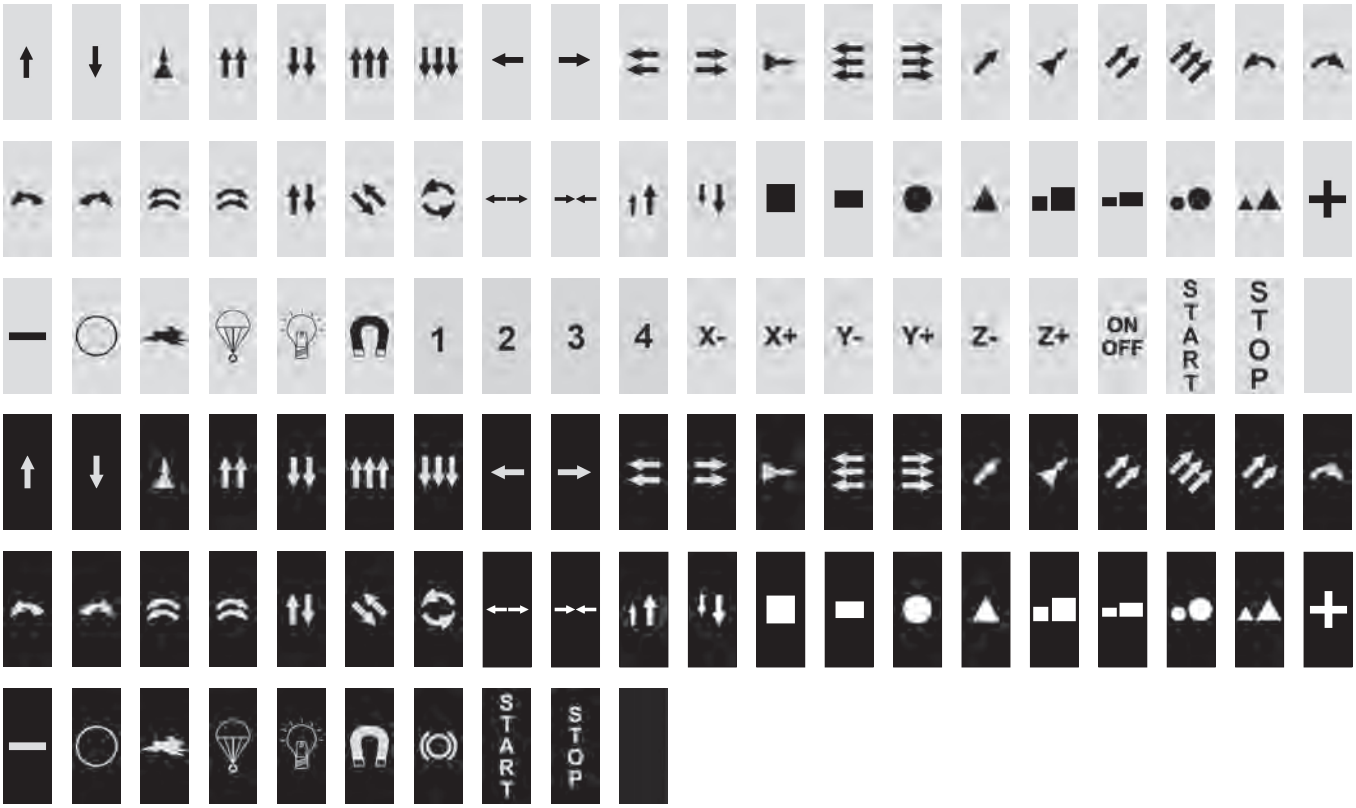

Label sheet - English

START	ALARM	RESET ALARM	RESET	STOP	LIGHT	RESET LINE	STOP LINE	START BUCKET	STOP BUCKET
BRAKE	BACK	UP	DOWN	UP LIFTING	DOWN LIFTING	UP LIFTING 1-2 SPEED	DOWN LIFTING 1-2 SPEED	UP LIFTING 3RD SPEED	DOWN LIFTING 3RD SPEED
UP LIFTING FAST	DOWN LIFTING FAST	LIFTING 2ND SPEED	LIFTING 3RDSPEED	UP AUXIL. LIFTING	DOWN AUXIL LIFTING	UP MAIN LIFTING	DOWN MAIN LIFTING	UP FAST MAIN LIFTING	DOWN FAST MAIN LIFTING
UP AUXIL. LIFTING 1-2 S.	DOWN AUXIL. LIFTING 1-2 S.	UP MAIN LIFTING 1-2 S.	DOWN MAIN LIFTING 1-2 S.	UP WINCH	DOWN WINCH	UP WINCH 1-2 SPEED	DOWN WINCH 1-2 SPEED	UP FAST WINCH	DOWN FAST WINCH
UP SLOW RIGHT WINCH	DOWN SLOW RIGHT WINCH	UP FAST RIGHT WINCH	DOWN FAST RIGHT WINCH	UP SLOW LEFT WINCH	UP FAST LEFT WINCH	DOWN FAST LEFT WINCH	UP HOIST	DOWN HOIST	UP HOIST 1-2 SPEED
DOWN HOIST 1-2 SPEED	UP FAST HOIST	DOWN FAST HOIST	FORWARD	BACKWARD	FORWARD TROLLEY	BACKWARD TROLLEY	FORWARD FAST TROLLEY	BACKWARD FAST TROLLEY	FORWARD TROLLEY 1-2 S.
BACKWARD TROLLEY 1-2 S.	FORWARD BRIDGE	BACKWARD BRIDGE	FORWARD FAST BRIDGE	BACKWARD FAST BRIDGE	FORWARD BRIDGE 1-2 S.	BACKWARD BRIDGE 1-2 S.	FORWARD TRANSLATION	BACKWARD TRANSLATION	LEFT
RIGHT	LEFT TROLLEY	RIGHT TROLLEY	LEFT FAST TROLLEY	RIGHT FAST TROLLEY	LEFT TROLLEY 1-2 S.	RIGHT TROLLEY 1-2 S.	LEFT BRIDGE	RIGHT BRIDGE	LEFT FAST BRIDGE
DOWN SLOW LEFT WINCH	RIGHT FAST BRIDGE	LEFT BRIDGE 1-2 S.	RIGHT BRIDGE 1-2 S.	CCW ROTATION	CW ROTATION	CCW FAST ROTATION	CW FAST ROTATION	CCW ROTATION 1-2 S.	CW ROTATION 1-2 S.
CCW ROTATION 3RD SPEED	CW ROTATION 3RD SPEED	LEFT CTRL STATION	RIGHT CTRL STATION	TROLLEY LEFT	TROLLEY RIGHT	SLOW	FAST	FAST TROLLEY	FAST BRIDGE
FAST LIFTING	FAST ROTATION	WINCH MATCHING	OPEN	CLOSE	OPEN GRAPPLE	CLOSE GRAPPLE	OPEN BUCKET	CLOSE BUCKET	OPEN DOOR
CLOSE DOOR	SPEED UP	SPEED DOWN	RAISE	LOWER	LOAD	DOWNLOAD	ENERGIZE	DE-ENERGIZE	ENERGIZE MAGNET
DE-ENERGIZE MAGNET	APPROACH	CONSENT	AUTOMATIC	MANUAL	MAN-0-AUTO	OFF-MAN-AUTO	ON	OFF	ON-OFF
IN	OUT	NORTH	SOUTH	EAST	WEST	OVERLOAD	TARE	1-1+2-2	1-2-1+2
1+2	ON-OFF	A-A+B-B							

Label sheet - Spanish

MARCHA	ALARMA	MARCHA ALARMA	PARO	STOP	LUZ	MARCHA LINEA	PARO LINEA	MARCHA PALA	PARO PALA
FRENO	RETORNO	SUBIR	BAJAR	SUBIR ELEVACION	BAJAR ELEVACION	SUBIR ELEV. 1-2 VEL.	BAJAR ELEV. 1-2 VEL.	SUBIR ELEV. 3ª VEL.	BAJAR ELEV. 3ª VEL.
SUBIR ELEV. RAPIDA	BAJAR ELEV. RAPIDA	2ª VEL. ELEVACION	3ª VEL. ELEVACION	SUBIR AUX. ELEVACION	BAJAR AUX. ELEVACION	SUBIR ELEV. PRINCIPAL	BAJAR ELEV. PRINCIPAL	SUBIR ELEV. PRINC. RAPIDA	BAJAR ELEV. PRINC. RAPIDA
SUBIR AUX. 1-2 VEL.	BAJAR AUX. 1-2 VEL.	SUBIR PRINC. 1-2 VEL.	BAJAR PRINC. 1-2 VEL.	SUBIR POLIPASTO	BAJAR POLIPASTO	SUBIR POLIP. 1-2 VEL.	BAJAR POLIP. 1-2 VEL.	SUBIR POLIP. RAPIDO	BAJAR POLIP. RAPIDO
POLIP. DER. SUBIR LENTO	POLIP. DER. BAJAR LENTO	POLIP. DER. SUBIR RAPIDO	POLIP. DER. BAJAR RAPIDO	POLIP. IZQ. SUBIR LENTO	POLIP. IZQ. SUBIR RAPIDO	POLIP. IZQ. BAJAR RAPIDO	SUBIR GANCHO	BAJAR GANCHO	SUBIR GANCHO 1-2 VEL.
BAJAR GANCHO 1-2 VEL.	SUBIR GANCHO RAPIDO	BAJAR GANCHO RAPIDO	ADELANTE	ATRAS	ADELANTE CARRITO	ATRAS CARRITO	ADELANTE CARR. RAPIDO	ATRAS CARR. RAPIDO	ADELANTE CARR. 1-2 VEL.
ATRAS CARR. 1-2 VEL.	ADELANTE PUENTE	ATRAS PUENTE	ADELANTE PUENTE RAPIDO	ATRAS PUENTE RAPIDO	ADELANTE PUENTE 1-2 VEL.	ATRAS PUENTE 1-2 VEL.	ADELANTE TRASLACION	ATRAS TRASLACION	IZQUIERDA
DERECHA	IZQUIERDA CARRITO	DERECHA CARRITO	IZQUIERDA CARR. RAPIDO	DERECHA CARR. RAPIDO	IZQUIERDA CARR. 1-2 VEL.	DERECHA CARR. 1-2 VEL.	IZQUIERDA PUENTE	DERECHA PUENTE	IZQUIERDA PUENTE RAPIDO
POLIP. IZQUIER. BAJAR LENTO	DERECHA PUENTE RAPIDO	IZQUIERDA PUENTE 1-2 VEL.	DERECHA PUENTE 1-2VEL.	IZQUIERDA ROTACION	DERECHA ROTACION	IZQUIERDA ROT. RAPIDA	DERECHA ROT. RAPIDA	IZQUIERDA ROT. 1-2 VEL.	DERECHA ROT. 1-2 VEL.
IZQUIERDA ROT. 3ª VEL.	DERECHA ROT. 3ª VEL.	BOTONERA IZQUIERDA	BOTONERA DERECHA	CARRITO IZQUIERDO	CARRITO DERECHO	LENTO	RAPIDO	CARRITO RAPIDO	PUENTE RAPIDO
ELEVACION RAPIDA	ROTACION RAPIDA	ACOPLAMIENTO POLIPASTO	ABRIR	CERRAR	ABRIR PINZA	CERRAR PINZA	ABRIR PALA	CERRAR PALA	ABRIR PUERTA
CERRAR PUERTA	ACELERAR	DESACELERAR	ELEVAR	DESCENDER	CARGAR	DESCARGAR	IMANTAR	DESIMANTAR	IMANTAR MAGNETO
DESIMANTAR MAGNETO	ACERCAR	CONFIRMAR	AUTOMATICO	MANUAL	MAN-0-AUTO	OFF-MAN-AUTO	ON	OFF	ON-OFF
IN	OUT	NORTE	SUR	ESTE	OESTE	SOBRECARGA	TARA	1-1+2-2	1-2-1+2
1+2	ON-OFF	A-A+B-B							

Label sheet - French

MARCHE	ALARME	MARCHE ALARME	RESET	ARRET	LUMIERE	MARCHE LIGNE	ARRET LIGNE	MARCHE BENNE	ARRET BENNE
FREIN	RETOUR	MONTEE	DESCENTE	MONTEE LEVAGE	DESCENTE LEVAGE	MONTEE LEV. 1-2 VIT.	DESCENTE LEV. 1-2 VIT.	MONTEE LEV. 3EME VIT.	DESCENTE LEV. 3EME VIT.
MONTEE LEV. VITE	DESCENTE LEV. VITE	MONTEE LEV. 2EME VIT.	DESCENTE LEV. 3EME VIT.	MONTEE LEV. AUXILIAIRE	DESCENTE LEV. AUXILIAIRE	MONTEE LEV. PRINCIPAL	DESCENTE LEV. PRINCIPAL	MONTEE LEV. PRINC. VITE	DESCENTE LEV. PRINC. VITE
MONTEE LEV. AUX. 1-2 VIT.	DESCENTE LEV. AUX. 1-2 VIT.	MONTEE LEV. PRINC. 1-2 VIT.	DESCENTE LEV. PRINC. 1-2 VIT.	MONTEE TREUIL	DESCENTE TREUIL	MONTEE TREUIL 1-2 VIT.	DESCENTE TREUIL 1-2 VIT.	MONTEE TREUIL VITE	DESCENTE TREUIL VITE
TREUIL DROITE MONTEE LENTE	TREUIL DROITE DESC. LENTE	TREUIL DROITE MONTEE VITE	TREUIL DROITE DESCENTE VITE	TREUIL AUCHE MONTEE LENTE	TREUIL AUCHE MONTEE VITE	TREUIL AUCHE DESCENTE VITE	MONTEE PALAN	DESCENTE PALAN	MONTEE PALAN 1-2 VIT.
DESC. PALAN 1-2 VIT.	MONTEE PALAN VITE	DESCENTE PALAN VITE	AVANT	ARRIERE	AVANT CHARIOT	ARRIERE CHARIOT	AVANT CHARIOT VITE	ARRIERE CHARIOT VITE	AVANT CHARIOT 1-2 VIT.
ARR. CHARIOT 1-2 VIT.	AVANT PONT	ARRIERE PONT	AVANT PONT VITE	ARRIERE PONT VITE	AVANT PONT 1-2 VIT.	ARRIERE PONT 1-2 VIT.	AVANT TRANSLATION	ARRIERE TRANSLATION	GAUCHE
DROITE	GAUCHE CHARIOT	DROITE CHARIOT	GAUCHE CHARIOT VITE	DROITE CHARIOT VITE	GAUCHE CHARIOT 1-2 VIT.	DROITE CHARIOT 1-2 VIT.	GAUCHE PONT	DROITE PONT	GAUCHE PONT VITE
TREUIL GAUCHE DESC. LENTE	DROITE PONT VITE	GAUCHE PONT 1-2 VIT.	DROITE PONT 1-2 VIT.	GAUCHE ROTATION	DROITE ROTATION	GAUCHE ROTATION VITE	DROITE ROTATION VITE	GAUCHE ROT. 1-2 VIT.	DROITE ROT. 1-2 VIT.
GAUCHE ROT. 3EME VIT.	DROITE ROT. 3EME VIT.	GAUCHE BOITE A BOUTONS	DROITE BOITE A BOUTONS	CHARIOT GAUCHE	CHARIOT DROITE	LENT	VITE	VITE CHARIOT	VITE PONT
VITE LEVAGE	VITE ROTATION	ACCOUPLEMNT. TREUIL	OUVRE	FERME	OUVRE PINCE	FERME PINCE	OUVRE BENNE	FERME BENNE	OUVRE PORTAIL
FERME PORTAIL	ACCELERATION	DECELERATION	HISSER	ABAISSER	CHARGE	DECHARGE	EXCITER	DESEXCITER	MAGNETISE
DEMAGNETISE	APPROCHE	CONSENTEMENT	AUTOMATIQUE	MANUEL	MAN-0-AUTO	OFF-MAN-AUTO	ON	OFF	ON-OFF
IN	OUT	NORD	SUD	EST	OUEST	SURCHARGE	TARE	1-1+2-2	1-2-1+2
1+2	ON-OFF	A-A+B-B							

Springer Controls Company • 96074 Chester Road, Yulee, FL 32097 • (904) 225-0575 • **www.springercontrols.com**

VICTOR - REQUEST FORM FOR NON STANDARD PENDANT STATION

Instructions

(See next page for list of components and legends)

Fill in the chart to the left according to the number of control elements required. Control stations are available with 1-2-3-4-6-8 control elements.

1. **Control elements**: enter the number corresponding to the control element required (1 to 39) according to the legend. Eg. 25

   ATTENTION: the rectangular mushroom pushbutton (8 - 9) is available only for Victor with 1 actuator.

2. **Button disks**: for pushbuttons (1 to 3) enter the number corresponding to the disk required (50 to 85) according to the legend. Both full color disks and transparent disks (for illuminated buttons) are available. Eg. 57

3. **Color of selectors, mushrooms, pilot lights**: for toggle selector switches (15 to 24), impulse mushroom pushbuttons (7) and pilot lights (11) enter the code corresponding to the color required according to the legend. Eg. RP

4. If you choose disks with arrows (legend 54 to 72), enter the direction of the arrow in the circle. Eg.

5. **Switches, LEDs and potentiometers**: enter the number corresponding to the switch, LED or potentiometers required (90 to 96) according to the legend. It is possible to enter up to 3 switches per position. Es. 91

   2 speed pushbuttons can activate two switches on the first speed and one switch on the second speed.

   Selector switches can activate only two switches and possibly a LED.

   ATTENTION: LEDs can be placed only in the central position and they are used for illuminated buttons and selector switches.

   (See Control Element legend for switch activation)

6. **Mechanical interlock and ON-OFF actuator**: tick the boxes where the mechanical interlock (MI) between two control elements or the latched ON-OFF change-over actuator (LA) is required. Eg. ☒

7. **Cover**: tick the box corresponding to the cover color required (the base of the enclosure is always black).

   ATTENTION: the yellow cover is available only for Victor with 1-2-3 actuators.

8. **SIL 1 certified**: tick the box if you require SIL 1 certified units.

9. **Label sheet**: stickers with letterings or symbols may be placed on the left and on the right of any control element. If label sheets are required, tick the corresponding box.

10. **Magnetic version**: tick the box if you require magnetic mounting case.

11. **cULus certified**: tick the box if you require cULus certified units. Not available on Victor with 6 and 8 control elements.

Cable clamp: the control stations are supplied with one cable clamp M20 x 1.5 and washer for assembling. The cable clamp can be mounted in various positions.

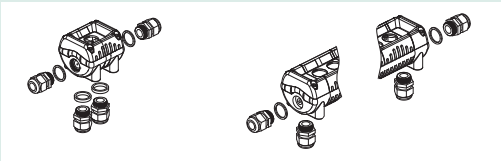

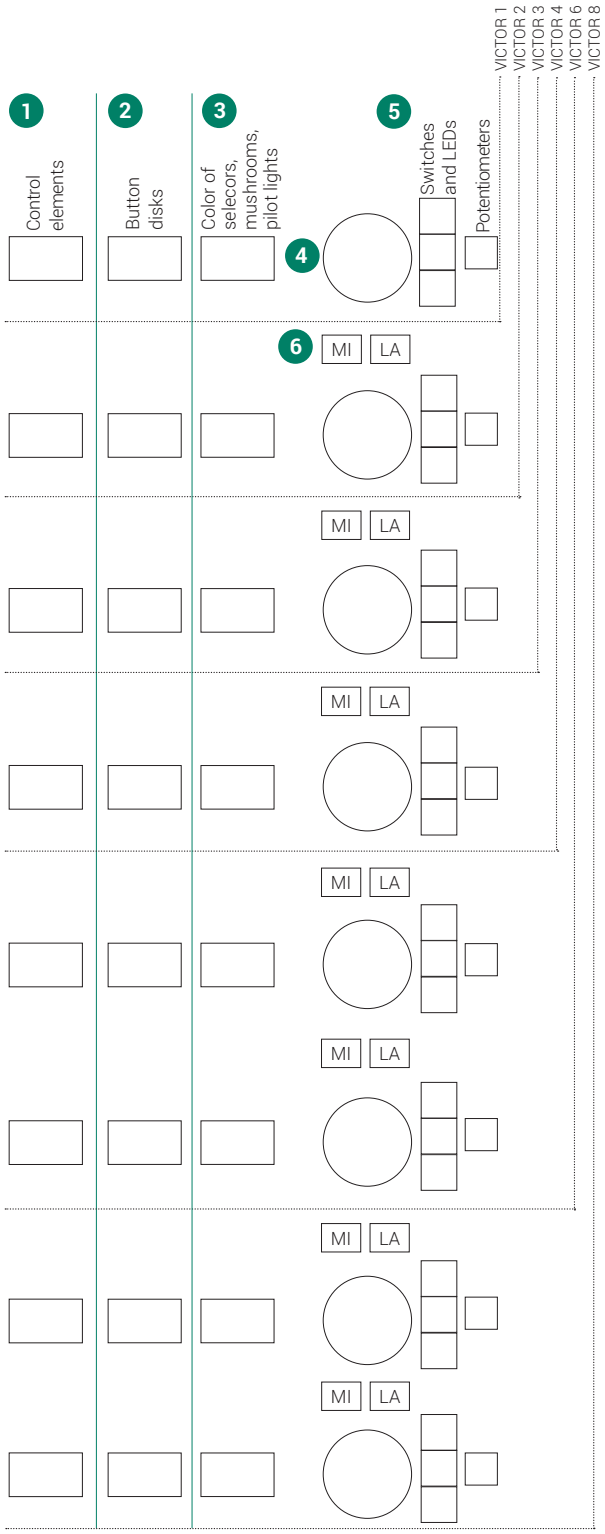

Cover 7

☐ Grey ☐ Black ☐ Yellow

SIL 1 certified 8

☐

Label sheet 9

☐ Symbols ☐ Spanish

☐ English ☐ French

Magnetic version 10

☐

cULus certified 11

☐

1 Legend - Control elements

* SWITCH ACTIVATION
It is possible to mount up to 3 switches for each control element. The chart on the right of each pushbutton or selector switch specifies which position activates the switch on the top, in the middle or on the bottom. If the selector switches are mounted with the lever facing downwards, then the the activation of the switches is reversed.
Eg.: 2 speed pushbutton: the first speed activates the switches on the top and in the middle, while the second speed activates the switch on the bottom.

Pushbuttons

It is possible to mount up to three switches for each button. LEDs can be mounted only in the middle.

		SWITCH ACTIVATION*
1	1 speed pushbutton with disk	speed 1
25	1 speed black pushbutton	speed 1
26	1 speed grey pushbutton	speed 1
2	2 speed pushbutton with disk	speed 1
27	2 speed black pushbutton	speed 1
28	2 speed grey pushbutton	speed 2
3	1 speed illuminated pushbutton with disk	speed 1 LED speed 1

Mushroom pushbuttons

All mushroom pushbuttons activate all the switches at the same time.

- 4 Latched mushroom pushbutton for emergency stop
- 5 Latched mushroom pushbutton for emergency stop Ø 40 mm
- 6 Key mushroom pushbutton
- 7 Impulse mushroom pushbutton Ø 33 mm with black base
- 8 Rectangular red mushroom pushbutton
- 9 Rectangular black mushroom pushbutton

11 Pilot light

12 Blanking plug

Toggle selector switches

It is possible to mount only two switches for each selector. In the middle it is possible to mount only the LED for illuminated selector switches.

		SWITCH ACTIVATION*
15	0/1 spring return	pos 1 pos 1
16	0/1 maintained positions	pos 1 pos 1
17	1/0/2 spring return	pos 1 pos 2
18	1/0/2 maintained positions	pos 1 pos 2
19	1/1+2/2 spring return	pos 1 e 1+2 pos 2 e 1+2
20	1/1+2/2 maintained positions	pos 1 e 1+2 pos 2 e 1+2
21	0/1/1+2 spring return	pos 1+2 pos 1 e 1+2
22	0/1/1+2 maintained positions	pos 1+2 pos 1 e 1+2
23	1/2 spring return	pos 1 pos 2
24	1/2 maintained positions	pos 1 pos 2

Key selector switches

It is possible to mount only two switches for each selector, and no switch/LED in the central position.

		SWITCH ACTIVATION*
30	0/1 spring return key out in position 0	pos 1 NA pos 1
31	0/1 maintained positions key out in position 0	pos 1 NA pos 1
32	1/0/2 spring return key out in position 0	pos 1 NA pos 2
33	1/0/2 maintained positions key out in position 0	pos 1 NA pos 2
34	0/1/1+2 spring return key out in position 0	pos 1+2 NA pos 1 and 1+2
35	0/1/1+2 maintained positions key out in position 0	pos 1+2 NA pos 1 and 1+2
36	1/2 change over spring return key out in position 1	pos 1 NA pos 2
37	1/2 change over maintained positions key out in positione 1	pos 1 NA pos 2
38	1/1+2/2 spring return key out in position 1+2	pos 1 and 1+2 NA pos 2 and 1+2
39	1/1+2/2 maintained positions key out in position 1+2	pos 1 and 1+2 NA pos 2 and 1+2

2 Legend - Button disks

Full color and symbol disks for pushbuttons (ref. 1 and 2)

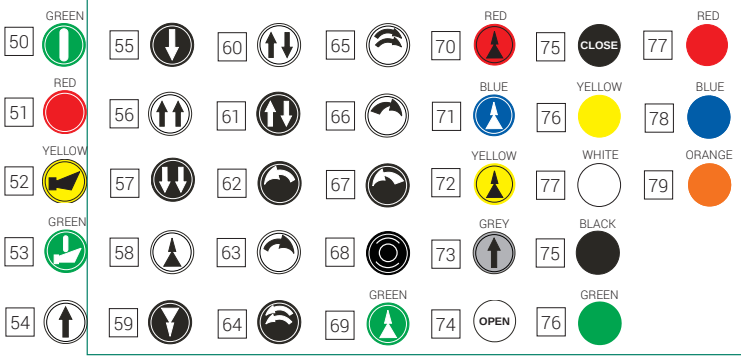

Transparent disks for illuminated buttons (ref. 3)

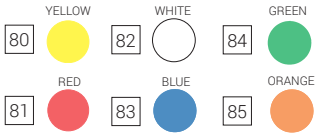

5 Legend - Switches, LEDs, potentiometers

- 90 PRSL1800PI - Switch 1NO
- 91 PRSL1801PI - Switch 1NC
- 92 PRSL1820PI LED 24/48 V AC/DC
- 93 PRSL1821PI LED 110/230 V AC
- 94 PRSL1891PI potentiometer 4.7 kΩ
- 95 PRSL1892PI potentiometer 10 kΩ
- 96 PRSL1893PI potentiometer 1 kΩ

3 Legend - Color of selectors, mushrooms, pilot lights

Non-illuminated toggle selector switches (ref. 15 to 24)

RP	Red	BP	Blue	AP	Orange
GP	Yellow	VP	Green	WP	White

Impulse mushroom pushbutton with black base (ref. 7)

R	Red	B	Blue	A	Orange
G	Yellow	V	Green	N	Black

Illuminated toggle selector switches (ref. 15 to 24)

RI	Red	BI	Blue	AI	Orange
GI	Yellow	VI	Green	WI	White

Pilot lights (ref. 11)

R	Red	B	Blue	A	Orange
G	Yellow	V	Green	W	White

Springer Controls Company • 96074 Chester Road, Yulee, FL 32097 • (904) 225-0575 • www.springercontrols.com

USE AND MAINTENANCE INSTRUCTIONS

Victor Wall-mounted Control Station is an electromechanical device for low voltage control circuits (EN 60947-1, EN 60947-5-1) to be used as electrical equipment on machines (EN 60204-1) in compliance with the fundamental requirements of the Low Voltage Directive 2014/35/UE and of the Machine Directive 2006/42/CE.

The control station is designed for industrial use and also for use under particularly severe climatic conditions (operational temperature from –40°C to +80°C, suitable for use in tropical environment). The equipment is not suitable for use in environments with potentially explosive atmosphere, corrosive agents or a high percentage of sodium chloride (saline fog). Oils, acids or solvents may damage the equipment; avoid using them for cleaning.

Do not connect more than one phase to each switch. Do not oil or grease the control elements or the switches.

The installation of the control station shall be carried out by expert and trained personnel. Wiring shall be properly done according to the current instructions.

Prior to the installation and the maintenance of the control station, the main power of the machinery shall be turned off.

Steps for the proper installation of the control station
- Open the control station.
- Break the seat choosen for the cable clamp on the base (7) making sure to remove any burr; in Victor 1 remove the switch support first (9).
- If you choose the bottom seats in Victor 1, fit the washer (10) (Victor 2-3-4-6-8 do not require washers in the bottom seats). For all control station Victor 1-2-3-4-6-8, if you choose the side seats fit the washer (5) and tighten the cable clamp (6).
- Fasten the control station on the desired support, making sure to match the spacing of the fixing holes on the base (7). Use M4 screws and check that the equipment is properly fastened. Use only the special fixing holes to fasten the control station.
- Insert the multi-pole cable into the control station through the cable clamp (6). Strip the cable to a length suitable for wiring the switches/LED (8).
- Tape the stripped part of the cable.
- Tighten the cable clamp (6) to fasten the multi-pole cable.
- Connect all the switches/LED (8) according to the wiring layout printed on the switches/LED and overleaf (tighten the wires into the terminals with a torque equal to 0.5 Nm; (UL (c)UL: use 60°C or 75°C copper (CU) conductors and stiff or flexible wire 14-22 AWG); insertability of wires into the terminals: 2x0.5mm^2 - 2x1.5 mm^2 - 1x2.5 mm^2).
- Close the control station checking the proper positioning of the tightening gasket (4), making sure the gasket fits well into the cover and the base seats.

ATTENTION: make sure that cover and base are positioned in the proper direction. Make sure no cable is in between the switches/LED (8) and the actuators mounted on the upper cover (1). Tighten the fixing screws (3) on the cover (1) with a torque of 250 cNm.

ATTENTION: Do not operate on the pushbuttons when the control station is not perfectly closed (with screws tightened and clips fitted) as this may cause the release of the mechanical interlock. If this happens, re-position the mechanical interlock before closing the control station.

Periodic maintenance steps
- Check the proper tightening of the screws (3) of the enclosure (1, 7).
- Check the proper tightening of the switch/LED (8) terminal screws.
- Check the wiring conditions (in particular where wires clamp into the switches).
- Check the conditions of the tightening gasket (4), of the rubber of the actuators (2) and of the cable clamp (6).
- Check that the plastic enclosure (1, 7) of the control station is not broken.
- Check that the control station is properly fastened.

In case any component of the pendant station is modified, the validity of the markings and the guarantee on the equipment are annulled. Should any component need replacement, use original spare parts only.

TER declines all responsibility for damages caused by the improper use or installation of the equipment.

UL Specifications

UL Technical Specifications
UL certified Victor code = F81XXXXXXXXXXXX
Category = NKCR / NKCR7
Switch Rating = A600, Q600
LED PRSL1821PI Rating = 110 – 240Vac, 1.15 – 2.50 mA
LED PRSL1820PI Rating = 24 – 48 Vdc/ac, 1.30 – 2.70 mA
Environmental Rating (Victor grey and black) = Type 1, 4 and 4X
Environmental Rating (Victor yellow) = Type 1, 4 and 4X indoor use only
Cord diameter range = 10-14 mm (PRPS0100PE)
= 6-12 mm (PRPS0105PE)
= 10-14 mm (PRPS0090PE)
= 6-12 mm (PRPS0095PE)
Cord type = flexible, type minimum SW or SJW (ZJCZ/7)
Wire size range = 14-22 AWG stranded or solid
Conductors = Copper (CU) 60/75°C
Terminal tightening torque = 4.50 lb.in (0.5Nm)
Marking = c UL us

Emergency Stop Button
Category = NISD3
Code = PRSL1880P1, PRSL1881PI
Switch = PRSL1801PI (A600, Q600)
Optional Switch = PRSL1800PI (A600, Q600)

Code = PRSL1890PI
Switch = PRSL1801PI (A600, Q600)

These unlisted components "emergency stop buttons" are intended for use within TECNO ELETTRICA RAVASI S.R.L. Listed (NKCR) Mike and Victor pushbutton stations.

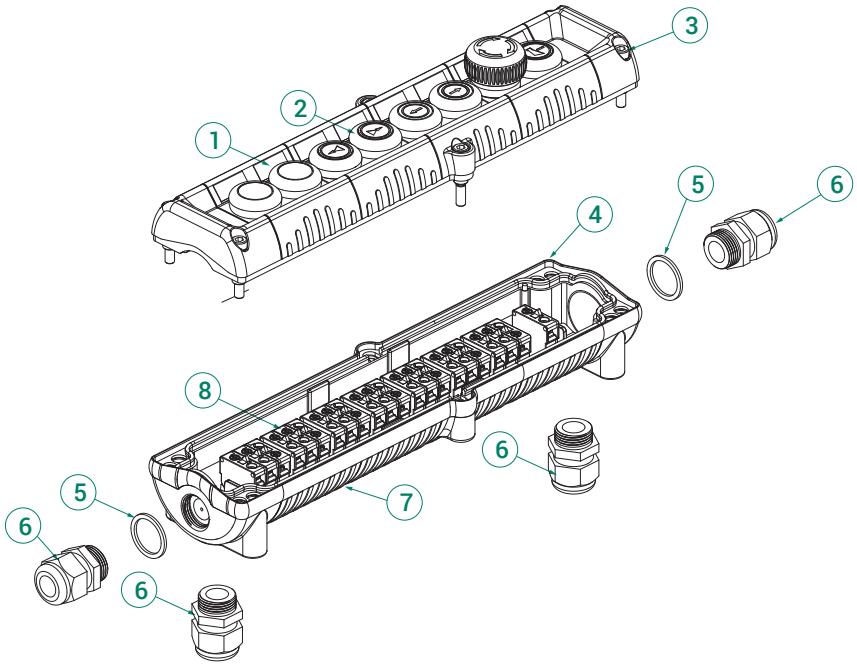

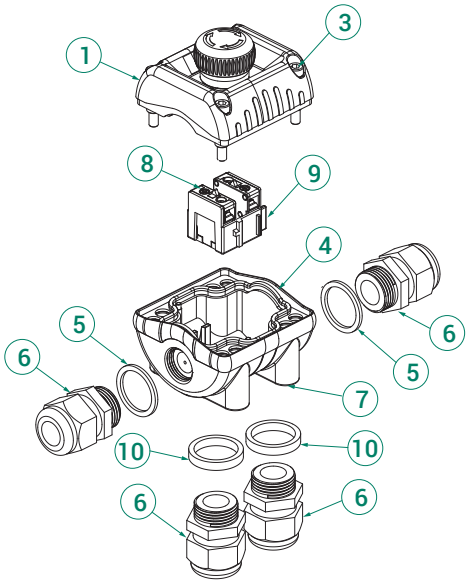

Switch activation

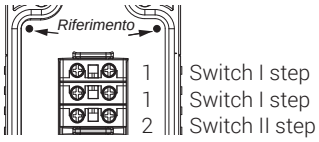

Pushbutton 2 steps

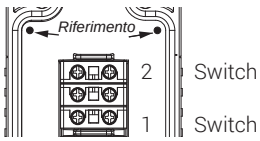

Selector 0/1/1+2

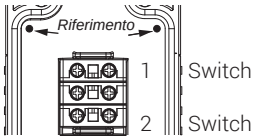

Selector 1/0/2
Selector 1/1+2/2
Selector 1/2

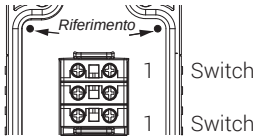

Selector 0/1

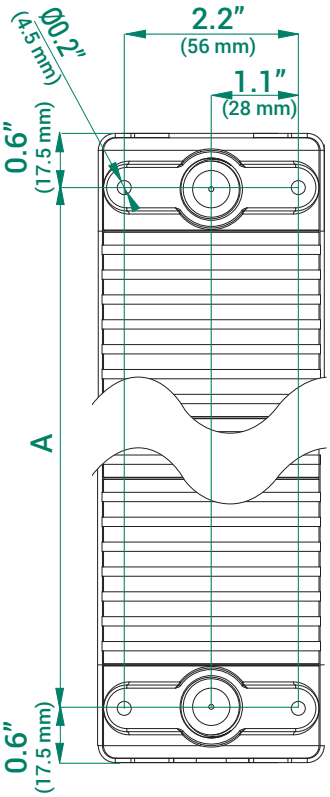

1NO
switch

1NC
switch

LED

No. of actuators	Dimensions
	A
1	1.5" (37.9 mm)
2	3.4" (87 mm)
3	4.6" (117 mm)
4	5.8" (147 mm)
6	8.1" (207 mm)
8	10.51" (267 mm)

Springer Controls Company • 96074 Chester Road, Yulee, FL 32097 • (904) 225-0575 • **www.springercontrols.com**

NOTES

Welcome to the Springer Controls Company. Product Guide to the TER VICTOR Wall-Mounted Control Station. This section reflects our continuing commitment to our customers to provide complete, up-to-date product information and technical data. We appreciate your choosing Springer Controls and we will continue to update this information as well as provide new products to meet today's demands for electrical control products.

Control Stations

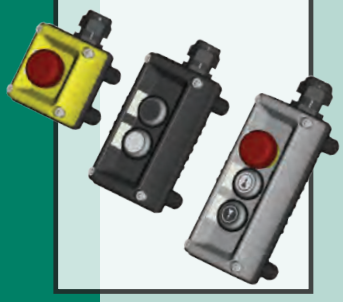

Power Switching Devices

Rotary Gear Limit Switches

Pendant Control Station

www.springercontrols.com

Visit our site, it includes new product information, complete product data with downloads, installation instructions, along with other Springer Control news.

SPRINGER
controls company

96074 Chester Road --- Yulee, Florida, 32097
Phone: (904) 225-0575 --- Fax: (904) 225-9084